EVAL-M3-102T01
EVAL-M3-102T01.SchDoc

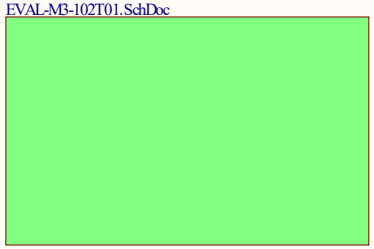

EVAL-M3-102T02
EVAL-M3-102T02.SchDoc

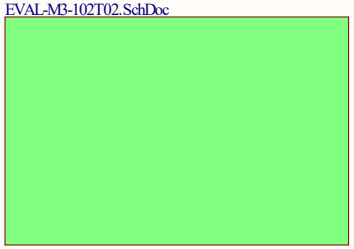

EVAL-M3-102T03
EVAL-M3-102T03.SchDoc

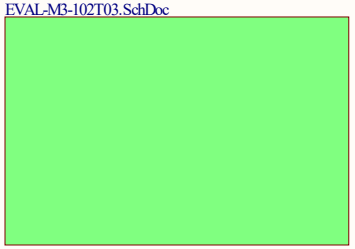

Legal Disclaimer
The information given in this document shall in no event be regarded as a guarantee of conditions or characteristics. With respect to any examples or hints given herein, any typical values stated herein and/or any information regarding the application of the device,Infineon Technologies hereby disclaims any and all warranties and liabilities of and kind, including without limitation, warranties of non-infringement of intellectual property rights of any third party.

Model Name: EVAL-M3-102T		
Approved: Zhonglin Liu		Revision: V1.0
Date: 2018/11/8	Time: 11:05:48	Sheet 00 of 03

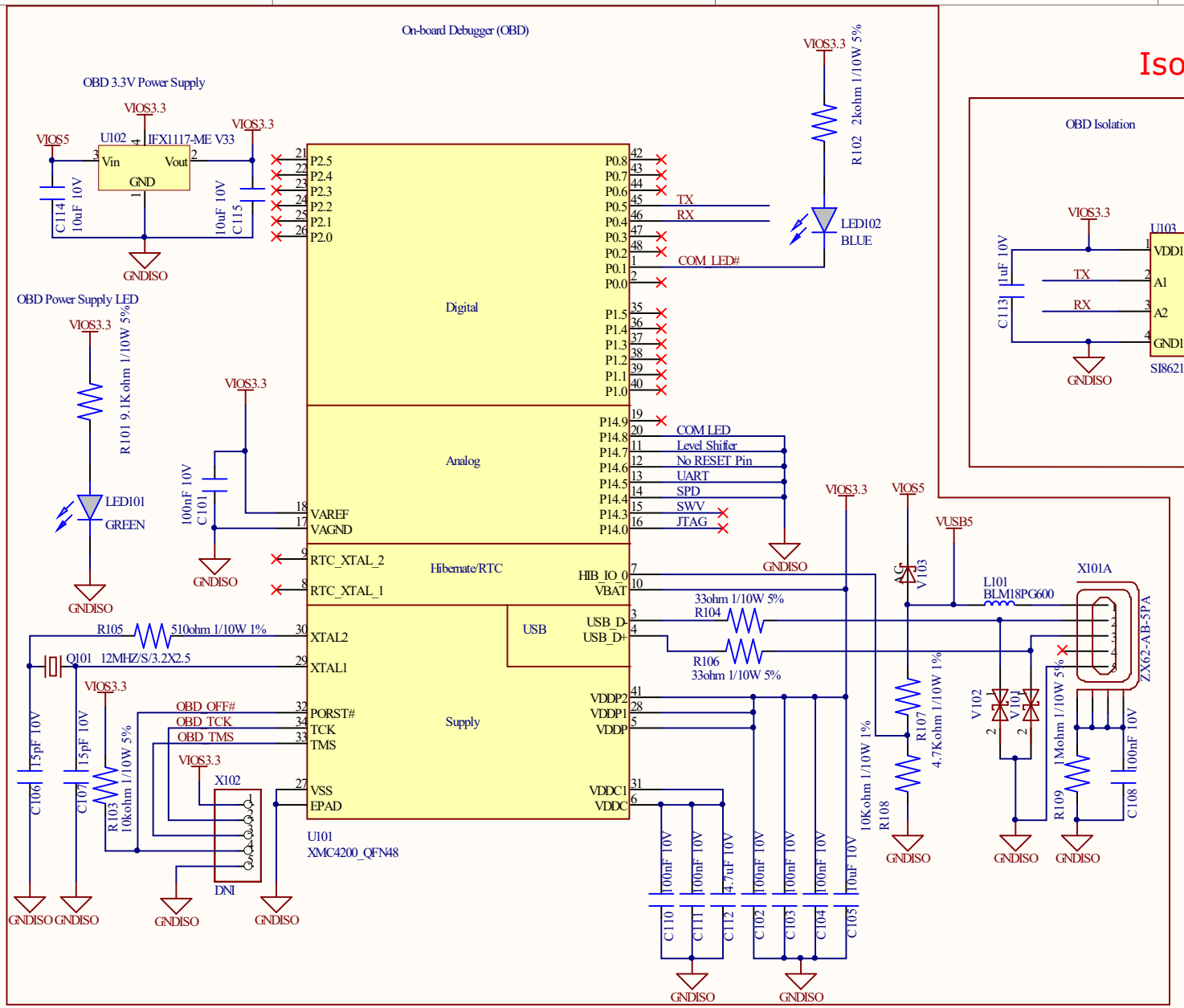

Isolation

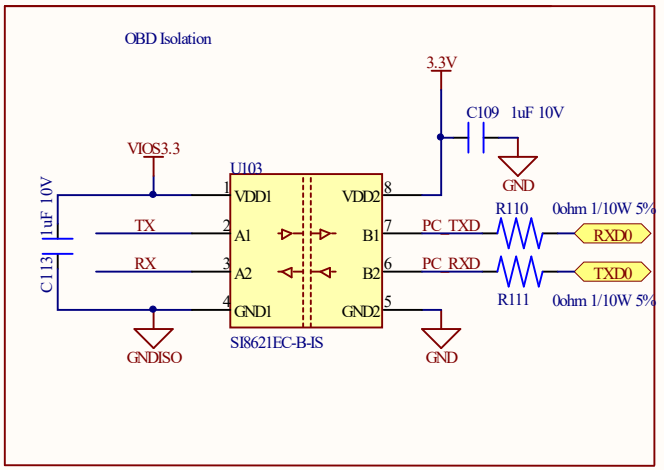

Legal Disclaimer

The information given in this document shall in no event be regarded as a guarantee of conditions or characteristics. With respect to any examples or hints given herein, any typical values stated herein and/or any information regarding the application of the device,Infineon Technologies hereby disclaims any and all warranties and liabilities of and kind, including without limitation, warranties of non-infringement of intellectual property rights of any third party.

On-Board Debugger

Model Name:	EVAL-M3-102T		
Approved:	Zhonglin Liu	Revision:	V1.0
Date:	2018/11/8 Time: 11:05:48	Sheet	01 of 03

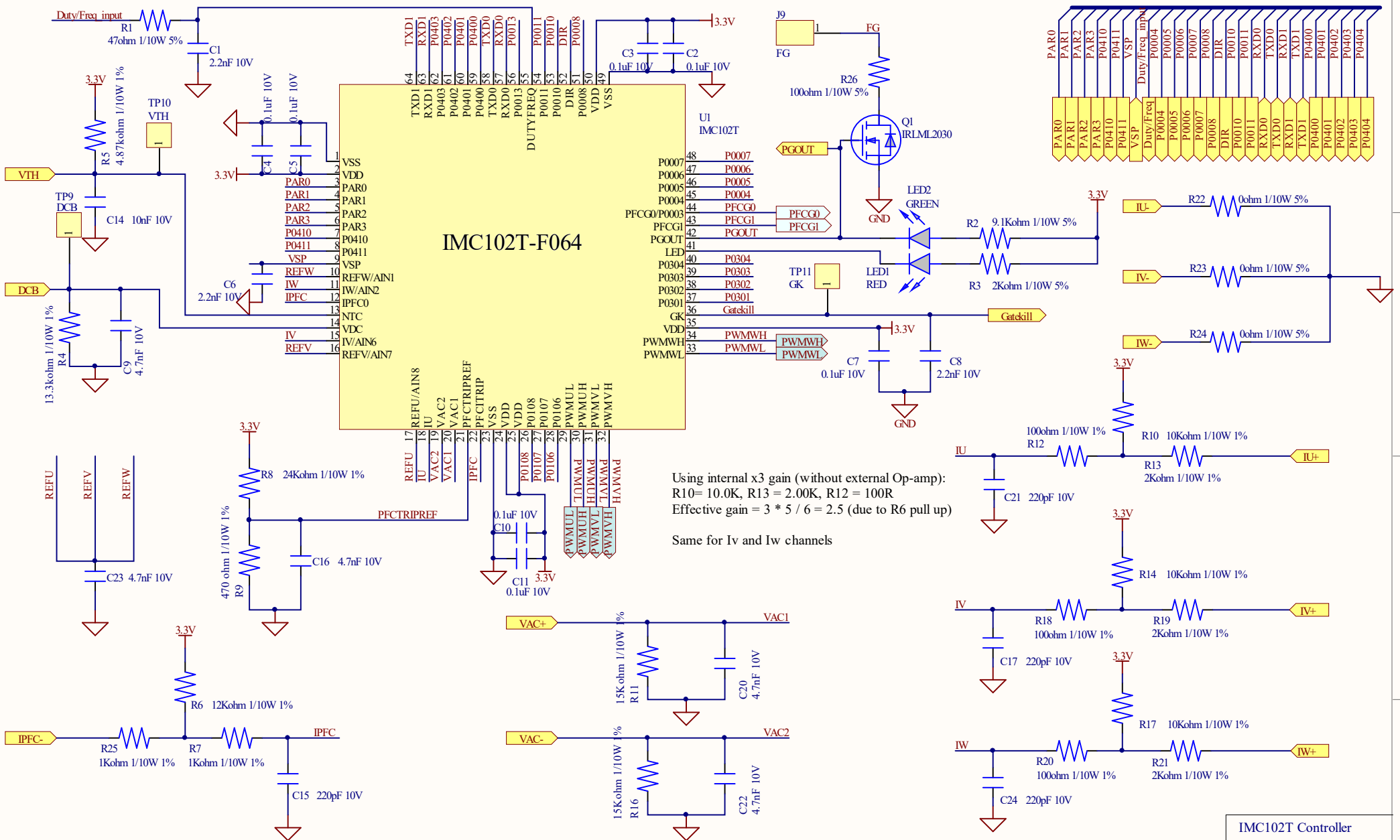

Legal Disclaimer

The information given in this document shall in no event be regarded as a guarantee of conditions or characteristics. With respect to any examples or hints given herein, any typical values stated herein and/or any information regarding the application of the device,Infineon Technologies hereby disclaims any and all warranties and liabilities of and kind, including without limitation, warranties of non-infringement of intellectual property rights of any third party.

IMC102T Controller

Model Name:	EVAL-M3-102T		
Approved:	Zhonglin Liu	Revision:	V1.0
Date:	2018/11/8 Time: 11:05:48	Sheet	02 of 03

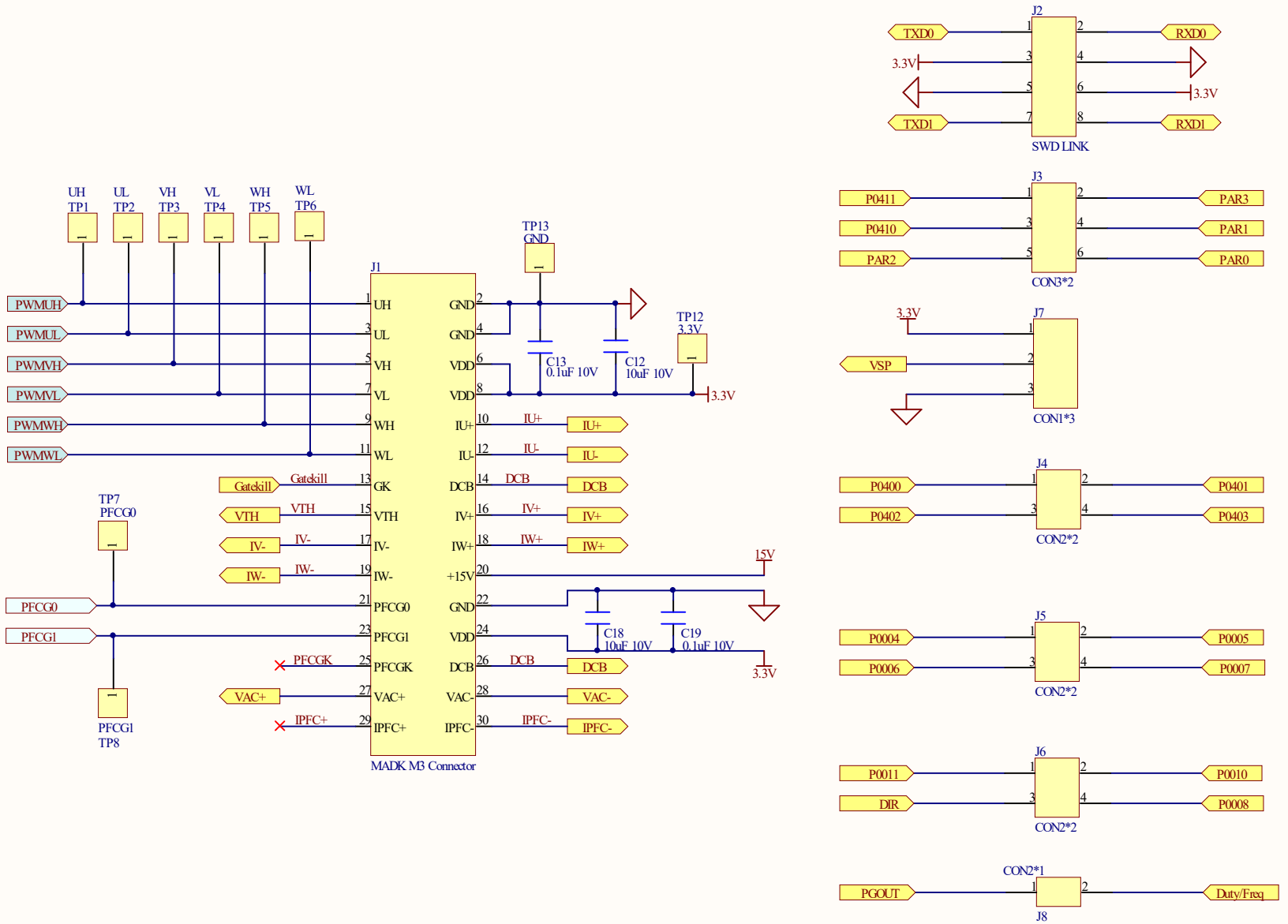

MADK CON & TEST Point

Legal Disclaimer

The information given in this document shall in no event be regarded as a guarantee of conditions or characteristics. With respect to any examples or hints given herein, any typical values stated herein and/or any information regarding the application of the device,Infineon Technologies hereby disclaims any and all warranties and liabilities of and kind, including without limitation, warranties of non-infringement of intellectual property rights of any third party.

Model Name:	EVAL-M3-102T		
Approved:	Zhonglin Liu	Revision:	V1.0
Date:	2018/11/8 Time: 11:05:49	Sheet	03 of 03

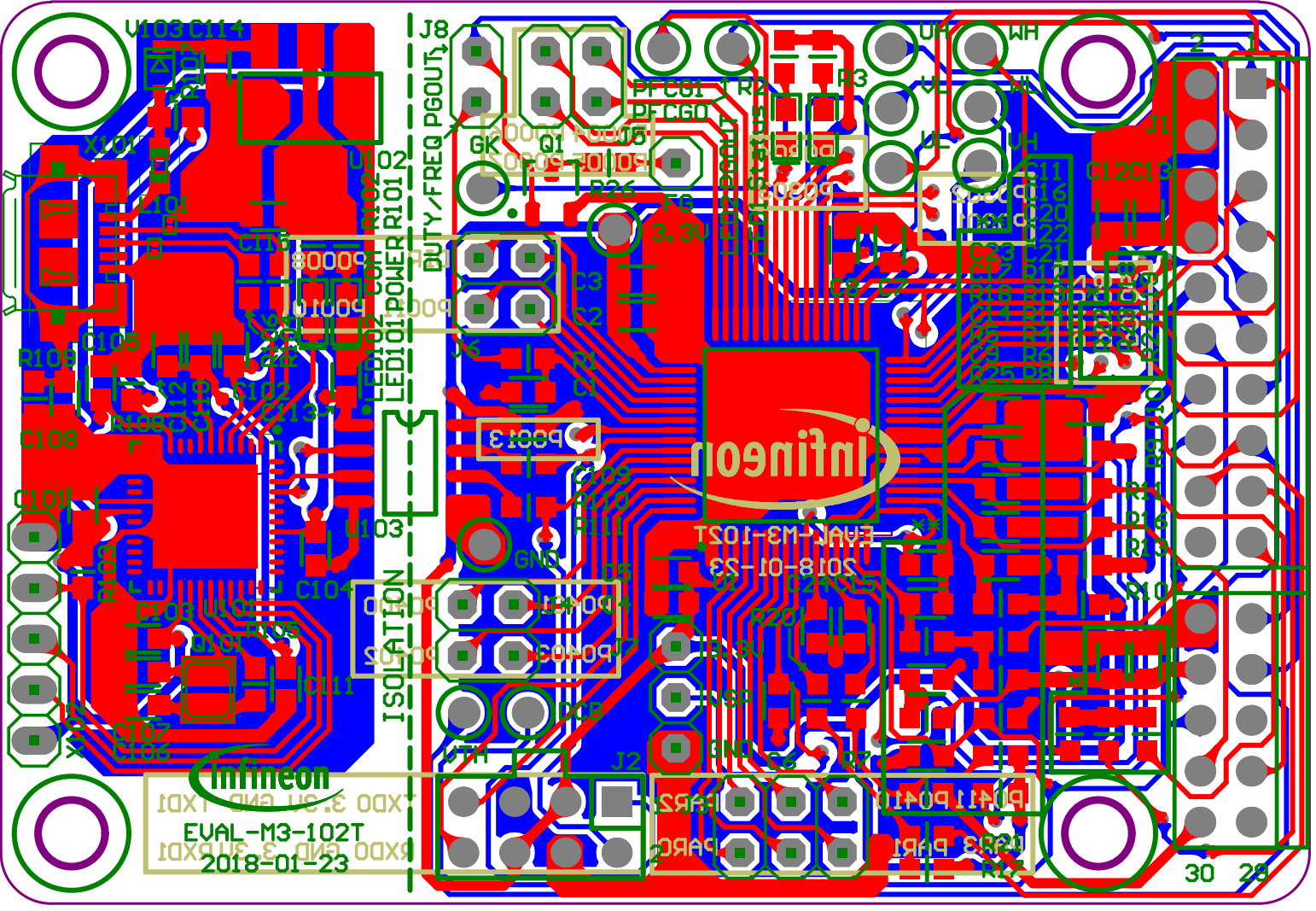

EVAL-M3-102T
2018-01-23
ISOLATION
DUTY/FREQ PGOUT
LED101 POWER R101
Infineon

Comment	Description	Designator	Footprint	LibRef	Quantity
TP12	Connector	3.3V	TP	CON1	1
2.2nF 10V	CAP SMD 2.2nF 10V 0603	C1, C6, C8	C0603	C0603	3
0.1uF 10V	CAP SMD 0.1uF 10V 0603	C2, C3, C4, C5, C7, C10, C11, C13, C19	C0603	C0603	9
4.7nF 10V	CAP SMD 4.7nF 10V 0603, CAP SMD4.7nF 10V 0603	C9, C16, C20, C22, C23	C0603	C0603	5
10uF 10V	CAP SMD 10uF 10V 0603, CAP SMD 10uF 10V 0805	C12, C18, C105, C114, C115	C0603	C0603	5
10nF 10V	CAP SMD 10nF 10V 0603	C14	C0603	C0603	1
220pF 10V	CAP SMD 220F 10V 0603, CAP SMD 220pF 10V 0603	C15, C17, C21, C24	C0603	C0603	4
100nF 10V	CAP SMD 100nF 10V 0603	C101, C102, C103, C104, C108, C110, C111	C0603	C0603	7
15pF 10V	CAP SMD 15F 10V 0603	C106, C107	C0603	C0603	2
1uF 10V	CAP SMD 1uF 10V 0603	C109, C113	C0603	C0603	2
4.7uF 10V	CAP SMD 4.7F 10V 0603	C112	C0603	C0603	1
TP9	Connector	DCB	TP	CON1	1
TP11	Connector	GK	TP	CON1	1
TP13	Connector	GND	TP	CON1	1
MADK M3 Connector	MADK 30PIN CONNECTOR	J1	CON-MADK-2*15-2.54-90	MADK-30PIN-CONNECTOR	1
SWD LINK	CON4*2	J2	CON-SWD-Link-2*4	CON4*2	1
CON3*2	CON3*2	J3	CON2*3	CON3*2	1
CON2*2	CON2*2	J4, J5, J6	CON2*2	CON2*2	3
CON1*3	CON1*3	J7	CON1*3	CON1*3	1
CON2*1	CON2*1	J8	CON2*1	CON2*1	1
FG	CON1*1	J9	CON1*1	CON1*1	1
BLM18PG600	BLM18PG600	L101	L1608	Ferrite Bead	1
RED	LED RED 0603	LED1	LED0603	LED2	1
GREEN	LED GREEN 0603, LED RED 0603	LED2, LED101	LED0603	LED1	2
BLUE	LED BLUE 0603	LED102	LED0603	LED1	1
TP7	Connector	PFCG0	TP	CON1	1
TP8	Connector	PFCG1	TP	CON1	1
IRLML2030	HEXFET 30V 1.5A 29mohm POWERMOS SOT23 SMD	Q1	SOT23	NMOS	1
12MHZ/ S/ 3.2X2.5		Q101	32x25_2PAD	NX3225_22PAD	1
47ohm 1/ 10W 5%	RES SMD 1/ 10W 47ohm 0603	R1	R0603	RES0603	1
9.1Kohm 1/ 10W 5%	RES SMD 1/ 10W 9.1Kohm 0603	R2, R101	R0603	RES0603	2
2Kohm 1/ 10W 5%	RES SMD 1/ 10W 2Kohm 0603	R3, R102	R0603	RES0603	2
13.3kohm 1/ 10W 1%	RES SMD 1/ 10W 13.3kohm 0603	R4	R0603	RES0603	1
4.87kohm 1/ 10W 1%	RES SMD 1/ 10W 4.87kohm 0603	R5	R0603	RES0603	1
12Kohm 1/ 10W 1%	RES SMD 1/ 10W 12Kohm 0603	R6	R0603	RES0603	1
1Kohm 1/ 10W 1%	RES SMD 1/ 10W 1Kohm 0603, RES SMD 1Kohm 1/ 10W 0603	R7, R25	R0603	RES0603	2
24Kohm 1/ 10W 1%	RES SMD 1/ 10W 24Kohm 0603	R8	R0603	RES0603	1
470 ohm 1/ 10W 1%	RES SMD 1/ 10W 470 ohm 0603	R9	R0603	RES0603	1
10Kohm 1/ 10W 1%	RES SMD 1/ 10W 10Kohm 0603, RES SMD 10Kohm 1/ 10W 0603	R10, R14, R17, R108	R0603	RES0603	4
15Kohm 1/ 10W 1%	RES SMD 1/ 10W 15Kohm 0603	R11, R16	R0603	RES0603	2
100ohm 1/ 10W 1%	RES SMD 1/ 10W 100ohm 0603, RES SMD 100ohm 1/ 10W 0603	R12, R18, R20	R0603	RES0603	3
2Kohm 1/ 10W 1%	RES SMD 1/ 10W 2Kohm 0603, RES SMD 2Kohm 1/ 10W 0603	R13, R19, R21	R0603	RES0603	3
0ohm 1/ 10W 5%	RES SMD 0ohm 1/ 10W 0603, RES SMD 1/ 10W 0ohm 0603	R22, R23, R24, R110, R111	R0603	RES0603	5
100ohm 1/ 10W 5%	RES SMD100ohm 1/ 10W 0603	R26	R0603	RES0603	1
10kohm 1/ 10W 5%	RES SMD 1/ 10W 10kohm 0603	R103	R0603	RES0603	1
33ohm 1/ 10W 5%	RES SMD 1/ 10W 33ohm 0603	R104, R106	R0603	RES0603	2
510ohm 1/ 10W 1%	RES SMD 1/ 10W 510ohm 0603	R105	R0603	RES0603	1
4.7Kohm 1/ 10W 1%	RES SMD 1/ 10W 4.7Kohm 0603	R107	R0603	RES0603	1
1Mohm 1/ 10W 5%	RES SMD 1/ 10W 1Mohm 0603	R109	R0603	RES0603	1
IMC102T	IMC102T QFP64	U1		IMC102T	1
XMC4200_QFN48	XMC4200_QFN48	U101	INF-PG-VQFN-48-53-5200X5200TP_N	XMC4200_QFN48	1
IFX1117-ME V33	IFX1117-ME V33	U102	SOT-223	IFX1117-ME V33	1
SI8621EC-B-IS	SI8621EC-B-IS	U103	SO-8	SI8621	1
TP1	Connector	UH	TP	CON1	1
TP2	Connector	UL	TP	CON1	1
ESD237-B1-W0201	ESD237-B1-W0201	V101, V102	SG-WLL-2-1	ESD8V0L2B-03L	2
BAS3010A-03W	BAS3010A-03W	V103	SOD323-R	BAT60	1
TP3	Connector	VH	TP	CON1	1
TP4	Connector	VL	TP	CON1	1
TP10	Connector	VTH	TP	CON1	1
TP5	Connector	WH	TP	CON1	1
TP6	Connector	WL	TP	CON1	1
ZX62-AB-5PA	USB-ZX62-AB-5PA	X101	ZX62-AB-5PA_MICRO-USB	ZX62-AB-5PA_MICRO-USB	1
DNI		X102	1X05	PINHD-1X5	1